Tagra | T20IP | Surface | Tubular | 20.1x21.6mm | LED Profile | IP65 | Semi Clear Diffuser | 3M

360CIR3MIP65 / ITM002353



Datasheet

12-11-2026

www.tagra-lighting.co.uk

support@tagra-lighting.co.uk

Tagra | T20IP | Surface | Tubular | 20.1x21.6mm | LED Profile | IP65 | Semi Clear Diffuser | 3M



IP Rating	Lit Surface	Max Width	Mounting	Warranty
IP65	20mm	13mm	Surface	5 Years

SKU: 360CIR3MIP65
ITM: ITM002353

Key Features:

- **Dimensions (mm):** 20mm x 21mm x 3000mm
- **Body Colour:** Silver
- **Diffuser Colour:** Semi Clear
- **Dimensions (W x H x L):** 20 x 21 x 3000mm

Mechanical Data			
Body Colour:	Silver	**Diffuser Shape:**	Domed
Illuminated Surface Width:	20mm	**Max. LED Strip Light Width:**	13mm
Product Weight:	463g	**Dimensions (LxWxH):**	3000 x 20 x 21mm

Photometric Data			
Beam Angle:	360°	**Diffuser Colour:**	Semi Clear

Environmental Data			
Body Material:	Aluminium, PC Diffuser	**Ingress Protection (IP):**	IP65
Mounting Type:	Surface Mounted		

Dimension Drawing

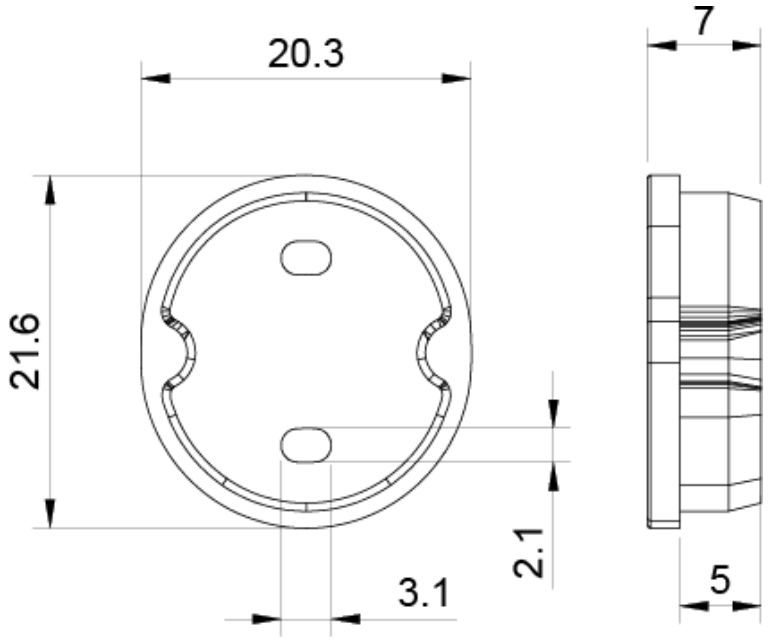

Packaging Data

Items / Sets Per Pack:	1	**Packaging Height:**	20mm
Packaging Length:	3000mm	**Packaging Width:**	20mm
Packaging Weight:	463g		

Disclaimer

Tagra Lighting have taken reasonable care to ensure that the information in this datasheet is accurate at time of publication however it should be noted that all specifications are subject to tolerance. Descriptive specifications such as colour are subjective. Tagra Lighting reserve the right to update specifications without notice. The information in the datasheet may only be relied on by customers of Tagra Lighting in accordance with applicable terms and conditions.

Tagra Lighting is a trading name of T.R Ventures Limited, a company incorporated in England with registered number 07757720. Our registered office is Unit 2, Southfield Industrial Estate, Trafford Park, M17 1SJ.

www.tagra-lighting.co.uk

support@tagra-lighting.co.uk